Adv. Space Res. Vol. 13, No. 7, pp. (7)215–(7)224, 1993
Printed in Great Britain.

0273–1177/93 $24.00
1993 COSPAR

ISOTHERMAL DENDRITIC GROWTH EXPERIMENT FLIGHT UNIT TESTS

E. Winsa,* M. Glicksman,** L. Levinson,* R. Hahn,**
M. Koss,** R. Abramczyk*** and J. Robertson***

* *NASA Lewis Research Center, Cleveland, OH 44135, U.S.A.*
** *Rensselaer Polytechnic Institute, Troy, NY 12180, U.S.A.*
*** *LeRC Group, Sverdrup Technology Inc., Cleveland, OH 44135, U.S.A.*

ABSTRACT

The *Isothermal Dendritic Growth Experiment* is a microgravity materials science experiment planned to fly on three *United States Microgravity Payload* missions. Tests of the engineering unit began in 1990. In mission simulations, succinonitrile dendrites were repeatedly solidified and photographed at supercoolings from 0.1 to 1.0 centigrade degrees. Then tip radii and velocities were measured to evaluate performance. Flight unit testing began in 1992. Flight unit teleoperational capabilities include uplink of commands and downlink of scientific and engineering data such as slow scan television images of solidifying dendrites and acceleration data. The first flight will be on the USMP-2 carrier in the Shuttle cargo bay during 1994.

INTRODUCTION

The *Isothermal Dendritic Growth Experiment* (IDGE) is a microgravity materials science experiment planned to fly on three *United States Microgravity Payload* (USMP) missions.

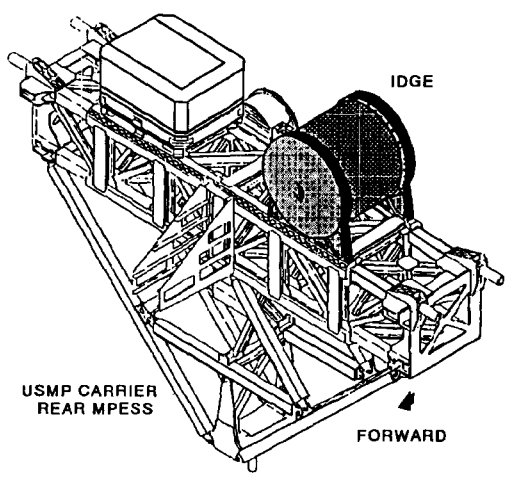

IDGE was conceived at the *Rensselaer Polytechnic Institute* (RPI) which is responsible for both science and dendritic growth chamber development. Project management responsibility resides at the NASA *Lewis Research Center* (LeRC) which has built the IDGE flight system in-house using a support service contractor team provided by *Sverdrup Inc.* USMP mission management responsibility resides at the NASA *George C. Marshall Space Center* (MSFC) which also developed the USMP carrier hardware. The NASA Headquarters *Microgravity Science and Applications Division* (MSAD) provides program funding. The NASA *Kennedy Space Center* (KSC) and *Johnson Space Center* (JSC) provide launch and mission support.

IDGE began with studies conducted by the *Principal Investigator* (PI) at RPI prior to 1981 /1/. LeRC became involved in 1983, and the Conceptual Design Review was successfully held in 1985. A near-flightworthy, high-fidelity engineering unit was completed in 1989. It passed all safety and interface tests such as random vibration and electromagnetic interference (EMI) tests. Mission simulations using the engineering unit began in 1990. Flight unit construction also began that year. Flight unit testing began in 1992 and will continue into early 1993. Shipment to KSC is planned for mid 1993.

The first of three flights will be on the USMP-2 carrier in the Space Shuttle (STS-62) cargo bay. During that flight, *succinonitrile* (SCN) dendrites will be solidified and photographed. A subsequent flight will substitute *pivalic acid* (PVA) for SCN.

This paper describes the IDGE mission objectives and the performance of the as fabricated and tested IDGE flight hardware and software system.

IDGE SCIENCE

The justification for MSAD space flight payloads is the cost effective return to earth of valuable scientific data that would otherwise be unobtainable. Consequently, the IDGE scientific objectives drove its design and development.

Scientific Objectives

IDGE is a *Materials Science* experiment concerning *dendritic solidification* of crystalline materials.

The *objective* is to *improve quantitative predictions* of dendritic solidification phenomena in industrially important metal alloys such as steel, aluminum alloys, and superalloys.

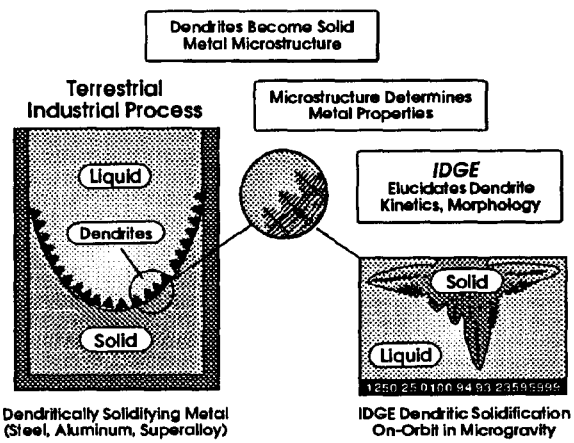

However, direct measurement of dendritic solidification phenomena in metals would present insurmountable experimental problems. For example, metals are opaque; therefore, dendritic solidification could not be directly optically observed. Moreover, their chemistry is complex and presents too many variables to differentiate with the limited quantity of experiments that can be conducted aboard the Space Shuttle. Finally, they melt and solidify at exceedingly high temperatures which are difficult to control with the needed precision.

Consequently, two model materials, SCN and PVA, will be studied by IDGE. These are transparent, ultrapure crystalline solids having low melting points (58 and 36 degrees Centigrade {°C} respectively). Extensive studies indicate that their dendritic solidification morphology and dynamics effectively mimic those of metals such as pure iron and pure nickel. Theories that correctly predict the morphology and

dynamics of SCN and PVA would presumably predict the morphology and dynamics of pure metals. Eventually, studies beyond the scope of IDGE would extend the predictions to industrial alloys produced on earth, such as steel.

The *focused objective* of the three planned IDGE flights is to provide SCN and PVA data sets that, in combination, will permit *statistically precise tests of existing and future mathematical models* that describe dendritic growth morphology and kinetics.

The *specific objective* of the first flight, and the hardware described in this paper, is to provide 1g and micro-g photographs with numerical temperature-time data that can be used to determine *SCN tip radii and solidification velocities versus melt supercooling*. Data sets will be created during preflight, flight, and post flight tests. For each set, twenty dendrites will be solidified (two at each of ten different supercoolings) and photographed. The data sets must permit statistically valid differentiation between terrestrial and space data and, also, between competing theories that predict radius and velocity. Dendrite side branch spacings will also be determined. Data will be in the form of 35mm film strips as depicted below. The dendrite image shown is an actual IDGE dendrite photograph enhanced and dithered to black and white for printing.

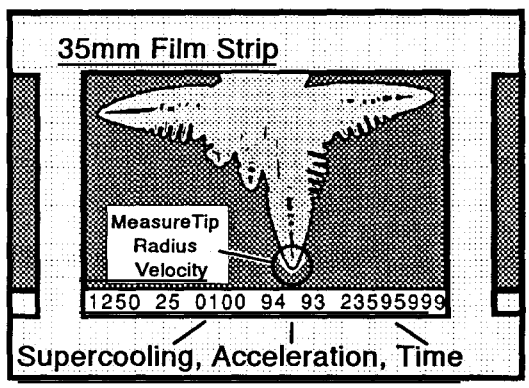

Justification for Space Experiment

On earth, dendritic solidification can be strongly affected by convective currents in the melt. These currents exist in virtually all industrially important metal solidification processes. However, their effect on dendritic solidification cannot be accurately modeled without knowledge of dendritic solidification in the absence of such currents.

The low acceleration environment in space effectively turns off convection in the IDGE experiment. Extensive peer review indicates that a comparison between space experiment data and earth experiment data is the only practical way to elucidate the effects of convection and discover the underlying mechanisms of dendritic solidification.

FLIGHT SYSTEM REQUIREMENTS, PERFORMANCE, AND DESCRIPTION

Science Requirements/Performance

The PI translated the specific scientific objective of the first flight into a list of science requirements to be met by the flight system. The more critical requirements are listed here along with a brief assessment of the measured IDGE flight system performance. Performance was evaluated by running several full and half length mission simulations with the engineering and flight units and evaluating the resulting data. In some cases, such as self induced vibration measurements, the units had to be specially instrumented. Currently, the engineering unit has been operated for more than 2000 hours, and the flight unit has been operated for over 300 hours. Thousands of dendrite photographs involving hundreds of dendritic growths at

supercoolings from 0.06 to 1.2 degrees have been accumulated and evaluated for engineering purposes. Approximately 1000 photographs from 50 growth experiments at temperatures from 0.1 to 1.0 degrees have received full scientific evaluation.

Quantity of Dendritic Solidification Experiments per Flight. Ten solidification experiments involving ten different supercoolings for each data set (preflight, flight, and post flight) are required. Supercoolings shall range from 0.1 to 1.0 centigrade degrees (C°). Both the engineering and flight units can provide over 20 experiments at up to 20 different supercoolings for each data set. Supercoolings can range from approximately 0.08 to 1.2C°. The exact mix is selectable by the PI prior to flight and can be modified during flight from the *Payload Operations Control Center* (POCC).

Quantity of Photographs per Solidification Experiment. Dendrite tip radius and velocity measurements will be taken from sequential 35mm photographs of each experiment. For each solidification experiment, five or more photographs from each of two orthogonally positioned cameras are required. The flight unit will provide up to ten photographs from each camera per experiment (twenty total photographs per experiment).

Isothermal Temperature Control. Temperature throughout melt volume in which the dendrite solidifies shall be maintained isothermal within 0.002C° prior to initiation of solidification. Testing indicates that both the engineering and flight units meet the requirement.

Temperature Measurement. Supercooling shall be accurately measurable to within 0.002C°. Testing indicates that both the engineering and flight units meet the requirement.

Dendrite Tip Radius Measurement. Require photographic and supercooling data quality such that the *unexplained* standard deviation of measurements from a regression line of *Tip Radius versus Supercooling* will be less than 3 percent. Tip radii will range from 12 microns to approximately 200 microns. Extensive measurements from engineering unit photographs combined with visual inspection of flight unit photographs indicates that the requirement will be met by the flight unit in at least 80 to 90 percent (perhaps 100 percent) of all experiments and in approximately 100 percent of the critical experiments; this is satisfactory. Final testing will begin in late 1992 and continue to mid 1993.

Dendrite Tip Velocity Measurement. Require photographic and supercooling data quality such that the *unexplained* standard deviation of measurements from regression line of *Tip Velocity versus Supercooling* to be less than 3 percent. Tip velocities will range from less than 1 to over 200 microns per second. Extensive measurements from engineering unit photographs combined with visual inspection of flight unit photographs indicates that the requirement will be met by the flight unit in approximately 100 percent of all experiments. Final testing will begin in late 1992.

Acceleration Environment Inside Test Volume. The allowable accelerations are a function of frequency and range from approximately 10 micro-g at 0Hz to approximately 10,000 micro-g at frequencies above 5Hz. IDGE uses nine cooling fans and one thermostatic bath stirrer which, in principal, could cause unwanted accelerations. Engineering unit tests indicate that IDGE will meet the requirements. Moreover, acceleration will be measured during each experiment.

Flight Unit Description

The complete IDGE flight system includes the following items: The *flight unit* that will be mounted on the USMP carrier in the cargo bay; the *Experiment Ground Support Equipment* (EGSE) that will be located in the POCC during flight; the EGSE that will be used at LeRC and KSC during checkout and mission simulations; and photograph analysis hardware and software located at RPI that will be used to determine tip radii, tip velocities, and side branch spacing.

This paper describes only the flight unit and POCC EGSE capabilities. The engineering unit is electronically identical to the flight unit and was used for some tests.

Overall description. IDGE is a 315kg unit that mounts to the top rails of the USMP rear *Mission Peculiar Experiment Support Structure* (MPESS). The USMP carrier provides power, liquid freon cooling, a GMT time signal, and a communications link to the POCC.

IDGE flight unit activation occurs from two simple toggle switches on the *Standard Switch Panel* (SSP) located in the aft flight deck of the Space Shuttle. Limited back up commanding is possible from the *Multi-function CRT Display System* (MCDS) also located on the aft flight deck. In nominal operation, an astronaut turns IDGE on; then, approximately 100hr later, an astronaut turns IDGE off. During the 100hr of operation 20 dendritic solidification experiments are autonomously conducted by the flight unit. Each mission results in 400 dendrite tip photographs and other data stored in non-volitile memory. The photographs are annotated with temperature, time, and acceleration data needed for their analysis.

During the mission, approximately 130 science and engineering data items, including *slow scan television* (SSTV) images, are downlinked to the POCC located at MSFC. Although IDGE has been designed for fully autonomous operation, uplink command of all experiment functions is possible from the POCC.

The IDGE flight unit has five on-board computers. Two semi-redundant *control* computers manage experiment functions. Two *Film Annotation System* (FAS) computers are slaved to the control computers to control the 35mm cameras. One *communications* computer communicates to the USMP carrier, to the POCC via a link supplied by the USMP carrier, and to the *Space Acceleration Measurement System* (SAMS) unit also located on the USMP carrier.

All IDGE active components, except one fan, are mounted in a structure named the *rack*. The rack is contained by the IDGE innermost *primary vessel* which, in turn, is contained by the IDGE *containment vessel*. The primary vessel incorporates a heat exchanger which uses USMP liquid freon supplied at 2 to

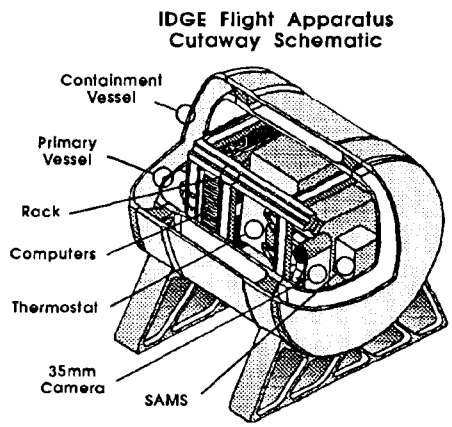

18°C. A *multi-layered insulation* (MLI) blanket covers the containment vessel.

The principal rack mounted components include the *dendritic growth chamber* contained inside the *thermostat, SAMS accelerometer head, photographic system, slow scan television system, and computers.* Other rack components include a computer independent binary and analog communications interfaces to the USMP carrier, two IRIG-B time interfaces to the carrier, eight low noise fans, and power conditioning circuits.

Dendritic growth chamber. The dendritic solidification (often referred to as dendritic growth) takes place in the *growth chamber*. The growth chambers are designed, fabricated, filled, and tested at RPI. Then, they are delivered to LeRC for installation into the flight unit. The chambers are constructed of stainless steel and glass. Testing at RPI proved that these materials do not contaminate the SCN which is over 99.9999 percent pure.

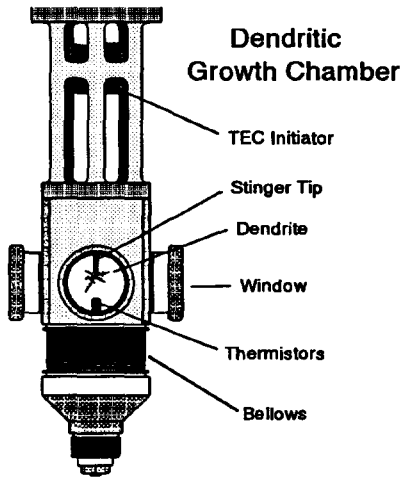

The chambers have internal dimensions of approximately 40mm by 80mm and are filled with SCN. The SCN also fills the hollow stinger tube which has a *thermoelectric cooler* (TEC) at the end. The cooler is used to initiate solidification of the SCN at the upper end of the stinger tube. Eventually, the solidification front moves down the length of the tube and the dendrite emerges at the tip of the stinger.

An accordion style bellows at the lower end of the chamber expands to compensate for the approximately 3 percent change in volume as the SCN melts.

Two redundant thermistors are located in the sheath projecting from the bottom of the growth chamber up into the test volume. They are used to measure the supercooling with an accuracy of 0.002C° and precision of 0.001C°.

Four windows permit viewing and photographing dendritic growth from two orthogonal directions.

Thermostat. The thermostat is an insulated tank containing the growth chamber surrounded by a water-etheylene glycol solution.

Heat is provided by two redundant, resistance heater coils powered by continuous, precisely controlled DC current.

Cooling is provided by two redundant ducted cooling fans. They pass cool air through the insulation surrounding the tank and into contact with the tank walls.

Temperature in the water-glycol is measured by two redundant pairs of thermistors that protrude through the walls of the tank. Each pair consists of a low resolution sensor and a high resolution sensor; they have resolutions of 0.025C° and 0.001C°, respectively.

The thermostat has four windows aligned with the windows in the growth chamber to permit viewing and photographing the dendrites.

The thermostat also contains redundant expansion compensators, redundant pressure relief valves, and redundant mechanical thermostatic switches as three failure tolerant protection against over pressure..

Thermostat Schematic

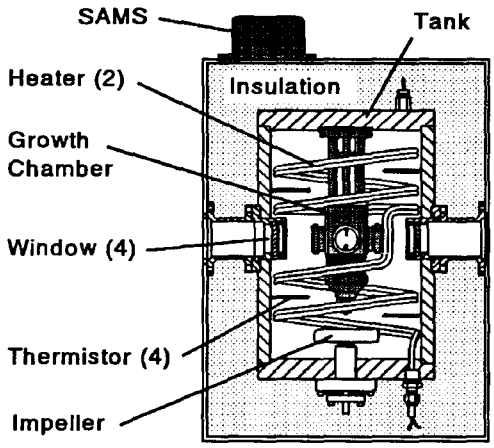

A specially designed motorized impeller, located at the bottom of the tank, gently stirs the water-glycol to evenly distribute heat and provide spatial isothermality outside the growth chamber.

In tests of an instrumented, dummy growth chamber inside the engineering thermostat, temperature throughout the dummy SCN test volume was maintained spatially isothermal to within 0.002C°.

In tests using an accelerometer instrumented growth chamber in the engineering unit, accelerations due to the stirrer and other "noise sources" were found to be within the science requirements. Typically accelerations were less than 30 micro-g over the range of 0 to 10Hz. Spikes greater than 30 micro-g were at the higher frequencies where they will cause no problems for IDGE.

Temperature measurement. High precision sensors are located in the growth chamber and thermostatic bath as previously described.

The sensors are connected to IDGE designed STD bus circuit cards that mount in the two redundant control computers. The cards convert changes in thermistor resistance into voltage differentials. These differentials are subsequently read by 12 bit A/D (analog to digital converter) cards and the resulting 12 bit value is converted to temperature by the control computer.

In tests, the engineering unit cards, which are identical to the flight cards, drifted less than 0.002C° during one calendar year of operation which included over 1000hr of active operation. Moreover, as the card environment changed temperature over a range of 10C°, drift in measured temperature was less than 0.001C°. Thus, once calibrated, the flight unit is expected to meet the science requirement for temperature measurement accuracy.

Temperature control. The previously mentioned redundant control computers and software provide temperature control. The same computers also control all other aspects of IDGE operation.

The software uses sensor readings, as previously described, and a modified *proportional-integral* algorithm to control the power setting of the thermostat heaters. A continuous current power source avoids

the possibility of electro-magnetic interference (EMI) that might be caused by a pulsed or chopped current power source.

In tests, both the engineering and flight units were able to maintain a constant temperature within 0.002C° of the setpoint for up to 3hr which meets the science requirement.

Dendrite photography. Solidifying dendrites are photographed by two single lens reflex *35mm cameras.* Both have film for approximately 235 pictures. In addition, two *slow scan television* (SSTV) cameras observe the dendrites along the same optical paths.

The 35mm cameras view the dendrites along two orthogonal optical paths. To analyze dendritic growth,

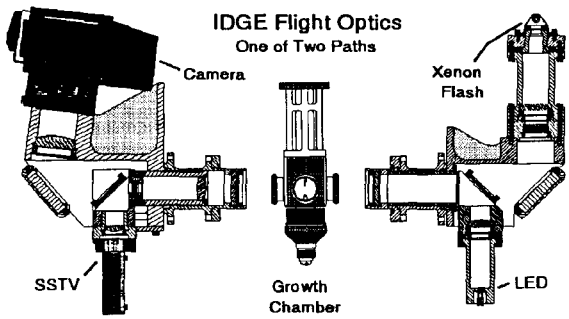

one image is required from each path. Only the 35mm cameras have adequate resolution for tip radius measurement. Thus, one of the images must be a 35mm image; the other can be either a 35mm image or SSTV image.

The 35mm photographic system must provide high contrast and good resolution over a large depth of field for the following reasons. Dendrites are colorless and transparent. They are small, ranging from 12 to 200 micrometers in tip radius (a needle has a 25 micrometer radius). They grow at random angles and can grow as much as 6mm towards or away from the cameras while remaining in view.

A focusing system could, in principal, provide the resolution needed but may not be practical for IDGE. The smallest dendrites grow quickly and leave the field of view within 30s. During that time 10 pictures must be taken; however, an autofocus system using technology available during IDGE development could not continuously adjust that quickly. Moreover, in some cases, two or more dendrite tips develop side-by-side. In that case, it is not known until after the experiment is complete which tip should be analyzed; hence, all tips must be kept in focus. None the less, due to very recent improvements in computer speed, etc., a focusing system will be considered as an upgrade for the PVA flight.

After extensive mathematical simulations and experiments, it was discovered that the ideal *fixed focus* system had to perform at, or slightly beyond, what was theoretically possible. Therefore, a compromise system was developed that met nearly all the requirements - including the most critical.

The system uses a collimated *xenon flash* to back light the dendrite. The collimated light passes through a narrow band pass *filter*. The collimated light is scattered when it hits the dendrite. The scattered light is blocked by the *aperture*. Consequently, in principal, only the *collimated rays* reach the *film* to form the image. The resultant image is a high contrast *silhouette* of the transparent, very low contrast dendrite at approximately 1.85X magnification on the film.

The collimated light combined with the relatively small aperture provides substantial depth of field for the fixed focus system. Moreover, the xenon flash freezes the apparent motion of the dendrite tips. Tests indicate that the aperture size selected gives approximately plus/minus 3mm depth of field, and resolution is sufficient to accurately measure all but the smallest (12 to 15 micrometer) dendrite tip radii, and even those

can be measured if the growth angle relative to the cameras is ideal. Minor adjustments and modifications,

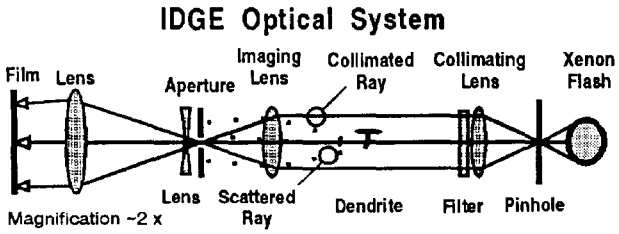

currently being evaluated, may extend measurements down to 10 microns. However, since the small tips are scientifically least interesting, the IDGE scientific objectives can be met without further improvements.

The pictures are cropped actual dendrite photographs with the gray scale (normally digitized to 256 levels) dithered to black and white for printing in this report. The left dendrite has approximately a 50 micrometer tip radius (distortion is an artifact caused by dithering). The right dendrite tip (37 micrometers) is shown as viewed by the IDGE tip measurement system. The software automatically determines the radius of the

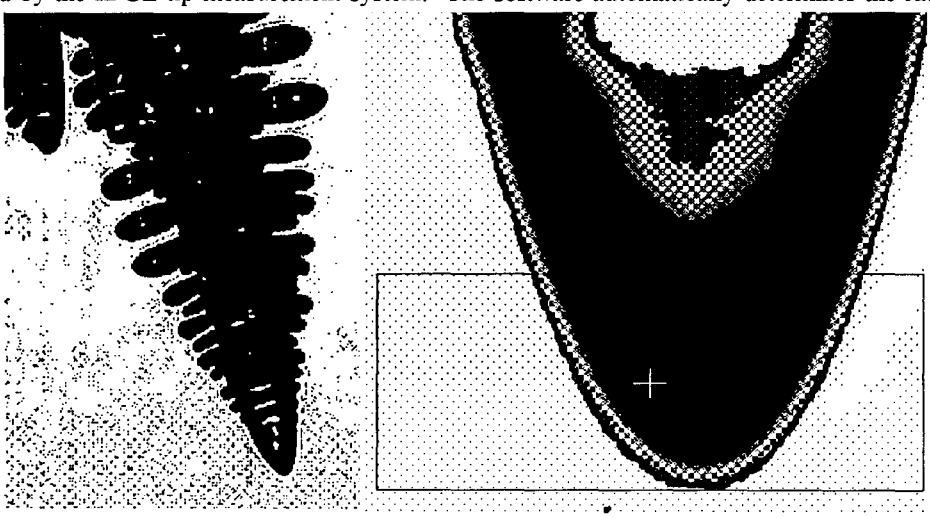

tip using only data from the area enclosed within the rectangular box.

Both 35mm camera systems are controlled by single board *Film Annotation System* (FAS) computers designed for that purpose. The computers manage all aspects of taking a sequence of pictures. Moreover, they annotate data onto the film using custom designed circuitry and modified 35mm camera film backs. Each FAS slave computer communicates with its master IDGE control computer.

Slow scan television. The slow scan television has three purposes. First, it is used by the control computers to detect the presence of dendrites. After detection, the 35mm cameras commence photography. Second, SSTV images are stored in IDGE non-volitile memory to back up the 35mm images. Third, images are transmitted to the POCC as part of the teleoperations data stream. SSTV illumination is collimated, and *light emitting diodes* (LED) provide the light. The digital SSTV cameras resolve 512 by 512 pixels; they were developed in-house at LeRC.

POCC Equipment and Operations

Although designed to operate autonomously, the flight unit is fully teleoperational via the MSFC POCC system.

Data downlink. Once each second, IDGE communicates a *data packet* containing a portion of 130 data items and SSTV images to the USMP *system control unit* (SCU) computer. The SCU merges the IDGE data with data from other USMP experiments into larger packets. These are passed to the shuttle *payload data interleaver* (PDI) and merged with an even larger Shuttle data stream. That data is communicated via satellite and ground station to the MSFC POCC. There the extensive POCC computer network extracts the IDGE data and transmits it via RS422 to the IDGE project supplied EGSE computers. In addition, engineering data is communicated to the POCC independently of the IDGE computers via separate analog and digital interfaces to the SCU. Some of this data is displayed on the Shuttle MCDS for astronaut use.

The EGSE consist of four 80486 PC-compatible computers and a workstation computer. The PCs display and analyze IDGE data, and the workstation displays and analyzes SAMS real time acceleration data. All the PCs run the same software. Each has several different screen displays optimized for different tasks. For example, the *science display* (primarily used by the PI) includes experiment parameters, an SSTV image, a recent acceleration history graph from the SAMS sensor inside the flight unit, and a timeline graph that plots SCN temperature and significant events such as photography. Other screens are dedicated to such things as malfunction diagnosis and engineering data. One screen allows near real time calculation of dendrite tip velocity and tip radii during the experiment using sequential SSTV images. However, due to the low resolution of the SSTV, the values will be rough approximations. None the less, they will be valuable indicators of experiment progress.

Command uplink. IDGE recognizes numerous pre-arranged commands which allow adjustment of nearly every aspect of the experiment. However, uplinked commands will not be used except to recover from abnormal or unanticipated conditions. Commanding will be via a POCC supplied terminal which has been programmed by the IDGE POCC software engineer. The commanding hardware/software is independent of the RS422 communications system. It operates through the Shuttle MCDS computer. Consequently, if communications are partly lost, the astronauts can perform limited commanding from the aft flight deck.

CONCLUDING REMARK

Although not designed as a facility, the IDGE structure, power conditioning, internal environment control, computers, teleoperations, photographic subsystem, SSTV, etc. might be an ideal starting platform for other experiments -- just replace the *thermostat* with an experiment unique module.

ACKNOWLEDGMENTS

The authors acknowledge the contributions of A.Sobota and D.R.Vachon to the preparation of this report and the accompanying presentation. They also acknowledge the contributions of the rest of the IDGE hardware development team: C.A.Blachly-Olah, D.A.Burns, A.J.Fedak, R.C.Forsgren, R.R.Grant, T.V.Hudach, A.M.Kawecki, A.K.Marlow, J.McDade, A.Patel, D.H.Priebe, and R.Whittlesey. J.K.Kearns is the MSAD Program Manager at NASA Headquarters.

REFERENCE

1. S.C. Huang & M.E. Glicksman, Fundamentals of Dendritic Solidification - I, *Acta Met*, Vol. 29, April, 701-715 (1981).